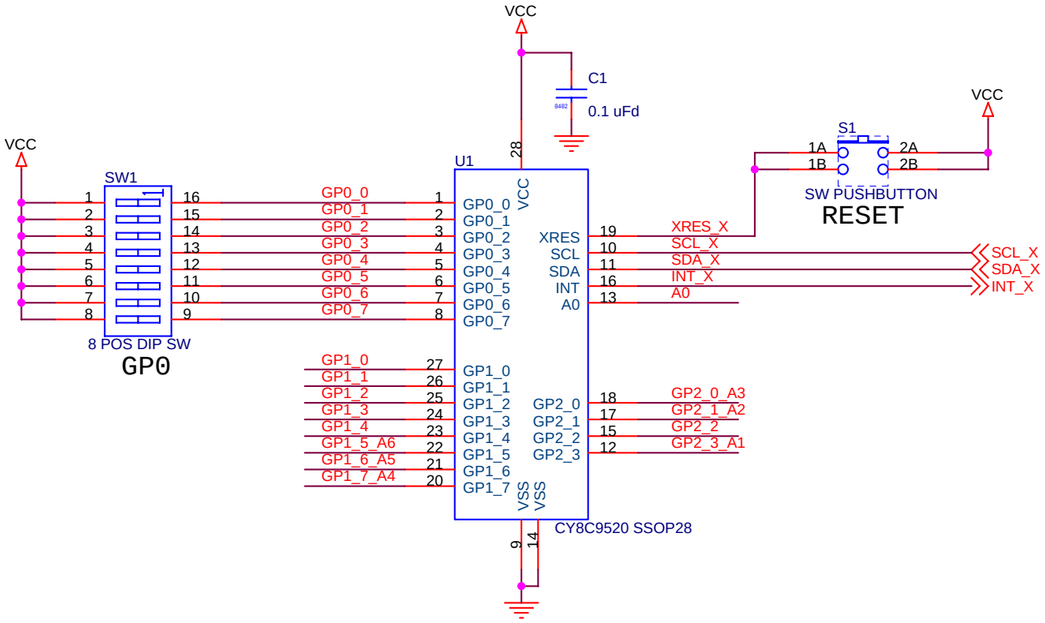

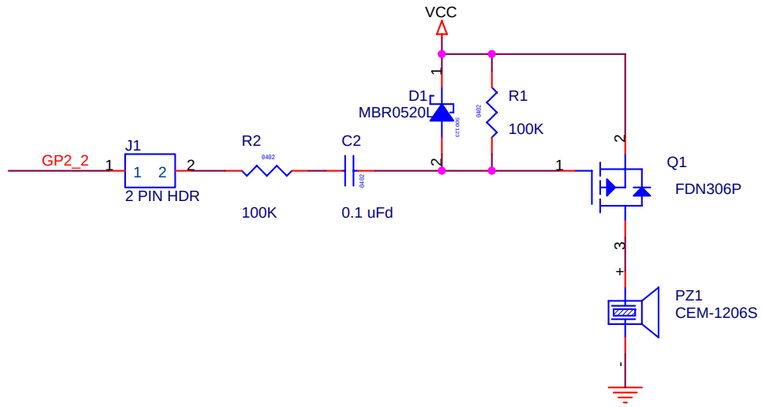

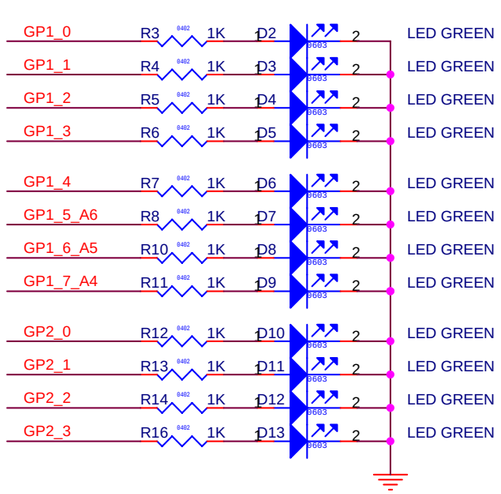

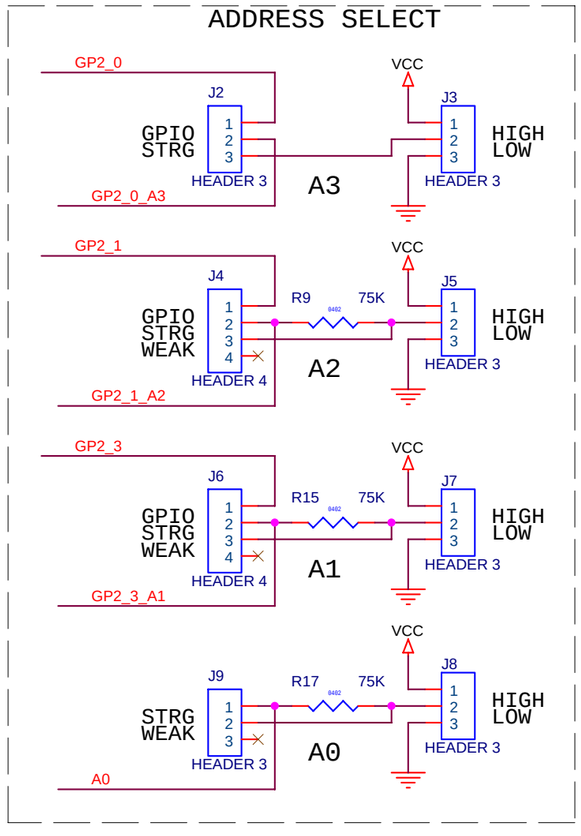

121R-37900
PDC-9379

PORT EXPANDER

CYPRESS SEMICONDUCTOR © 2006

Title: CY3242-IOXLite -- Port Expander Lite Demo		
Size: B	Document Number: REF-13833	Rev: *A
Date: Tuesday, January 16, 2007	Sheet 1 of 2	